Parallel synthesis of active RC filters revisited

Dejan Mirković, Jelena Milojković and Vančo Litovski

Abstract - In early attempt to design parallel active RC filters which went almost forgotten within the filter design community was an inspiration to develop a complete procedure which seems to be absolutely simple and leads to a schematic feasible for practical implementation. After analysis of most alternative solutions (synthesis based on simulated inductances; state-variable filters; cascade solution) we are describing the complete algorithm for synthesis of parallel active RC filters. To verify we synthesized two higher order band-pass filters one as cascade and the other as a parallel realization. Study of the results revealed that, apart of the price, the parallel solution is by far in most electrically based aspects, preferable.

Keywords - Analog circuits, Active filters, Circuit synthesis, RLC circuits, Operational amplifiers.

I. Introduction

Active RC filters implemented in different technologies such as discrete PCBs, hybrid and monolithic integrated circuits are around almost for half a century now and the feeling [1], [2] is spread that this issue is settled and the main alternative to convert the transfer function into a schematic is cascade synthesis. Accordingly, a wide variety of cells realizing biquad functions were developed intended to be cascaded to produce a higher order function [3]. Unfortunately, this process of conversion of a transfer function into a cascade leads a long way encompassing several serious algorithms to be implemented and leaving ambiguities which are still not resolved satisfactorily. There are some less frequently used alternatives such as state-space realization [5] which is stemming from the non-factored representation of the transfer function, and a realization based on simulated inductances [6] using an intermediary step – passive LC synthesis. The last two methods are not frequently implemented for higher order transfer function which will be addressed later on.

While parallel implementation is frequent in design of digital IIR and switched capacitor filters, to our knowledge there was a single systematic attempt to implement parallel realization of active RC circuits [7]. In [7], an effort was made to produce a realization implemented in hybrid technology with limitations on the capacitance values more economical than the cascade on the expense of reduced sensitivity. To achieve that the author created a specific (multiple input and multiple output) cells with reduced number of capacitors which we find the main reason for this method not to be further investigated.

In these proceedings we will develop a straightforward procedure for parallel synthesis based on repetitive use of one type of widely known and frequently used second order cell [4]. To our knowledge this is the first complete description of the procedure. To come to a base for comparison with a cascade solution, high order band-pass filters will be synthesized by both techniques and their properties evaluated. At least basically, similar comparison was made for switched capacitor filters in [8] but on a much smaller scale. Also, in [8] the comparison is made for filters operating in the lower audio band so avoiding to consider the influence of the imperfections of the operational amplifiers.

In the sequel we will first give a glimpse to the synthesis procedures based on cascade, state-variable, and passive LC realizations. Then we will fully develop the method for synthesis of parallel active RC circuits. Finally, a case study will be presented enabling comparison of the cascade and parallel procedure.

II. Cascade Synthesis of Active Filters

In this section the synthesis of active RC filters in a form of a cascade of second order cells (in the case of odd-order filters one additional first order cell is needed) will be discussed.

The transfer function is usually expressed in the following form,

$$H(s) = A_0 \frac{\prod_{i=1}^{m}(s - z_i)}{\prod_{i=1}^{n}(s - p_i)} \tag{1}$$

where n is the order of the filter, m is the number of finite transmission zeros, s is the complex angular frequency, $\mathbf{z} = \{z_1, z_2, \ldots, z_m\}$ is the vector of finite transmission zeros, $\mathbf{p} = \{p_1, p_2, \ldots, p_n\}$ is the vector of poles, and A_0 is a constant defining the gain of the filter at the central frequency of its passband (ω_0).

The creation of a cascade realization corresponding to a given transfer function faces many challenges the main of which will be listed below.

The transfer function (1) may be created in a large

Dejan Mirković, is with the Dep. of Electronics, Uni. of Niš, Faculty of Electronic Engineering, Aleksandra Medvedeva 14, Niš, Serbia, E-mail:dejan.mirkovic@elfak.ni.ac.rs.

Jelena Milojković, is with the ICNT, Bul. N. Tesle 40, Niš, Serbia E-mail: jelena.milojkovic@icnt.rs.

Vančo Litovski was with the Dep. of Electronics, Uni. of Niš, Faculty of Electronic Engineering, Aleksandra Medvedeva 14, Niš, Serbia, E-mail: vanco.litovski@elfak.ni.ac.rs. Retired.

number of variants depending of the pairing poles and zeros into biquads and depending on the ordering of biquads so obtained. According to one study, for example, in the case of n=m=8, there are 18 possible combination to create biquads while for n=m=12, one may create 1350 combinations. Of course, in the similar way rises the number of filter structures due to the ordering of the biquads in the cascade. To choose among all combinations a procedure is to be implemented enabling pairing in order to get optimal biquads and ordering of the biquads in order to get optimum from linearity and noise point of view. That may improve the final solution from noise, linearity, and range of element values i.e. total silicon area point of view [9]. The following rules are advised: Pairing the transfer function poles having highest imaginary part with the attenuation poles having minimal frequency; High-Q sections should be in the middle; All-pass sections should be near the input; Last stages should be high-pass or band-pass to avoid output dc offset.

After that, depending on the properties of a cell such as: Type of the cell-function (low-; band-; high-; all-pass or notch); Order of the cell-function (first or second); Sign of the gain (inverting or non-inverting); Type of the transmission zeros (at the origin; at infinity; pair on the imaginary axis; complex pair in the right-half plane; real single in the right-half plane; mixed in several combinations); Value of the Q-factor of the pole (low or high); a choice is made as to which circuit (cell type) should be the most appropriate for realization [1]. Note we came to the number of 22 of different cell types which need a proper circuit realization. The very cell structure and the element value calculation are usually based on the literature e.g. [4].

Everything settled, for a prescribed overall gain G_0, an algorithm is to be implemented to correctly distribute the gain to the cascaded cells and recalculate the element values.

One should have in mind that the resolution between high and low Q of a pole is in essence arbitrary and, what is more problematic, abrupt. It looks as if the boundary between high and low Q is depending on the cell itself and not on a universal criterion. Here comes the absence of solutions for the "medium Q" which seems to be the most frequent one.

Having all this in mind one may conclude that synthesis of active RC circuits of higher order in a form of a cascade of second order cells is complex and challenging a task, and being pessimistic, one may say a never finished task.

III. Synthesis Based On Simulated Inductances And The State Variable Approach

Having available large amount of already synthesized passive LC filters of many kinds in the literature e.g. [2] an approach was developed to create active RC and Gm-C filters by different circuit transformations mostly based on circuits simulating the inductance [6], [10].

Catalogues, however, despite the fact being very useful, are not covering many important solutions and limit the designer to solutions which may not be the most appropriate for the problem to be handled. For example, second-order Chebyshev type II and Elliptic filters never have asymptotic slope larger than 12 dB/oct. In addition, equi-ripple approximation of constant group delay and phase correctors are nowhere to be found catalogued. Accordingly, we think that in many cases the catalogues are not sufficient. If so, one goes for synthesis of its own transfer function and creates LC circuit that realizes it. Such an example function will be used throughout this paper [11]. It is based on LSM filters [12] but extended with complex and zeros on the axis of real frequencies.

LC filters are usually synthesized as a cascade of cells realizing one transmission zero each [13]. The process is based on first creation of the input impedance of the filter which needs the solution of the Feldtkeller equation (of order 2n) giving the reflection zeros needed. After extraction of a cell the residual input impedance is calculated. That involves subtraction and division of polynomials. In the case of higher order filters higher order polynomials produced by the Feldtkeller equation are to be solved. This creates errors at the very start of the synthesis. Later on, the error produced by division and subtraction related to a cell is accumulated making the element values of the last cells highly unreliable even if "long double" arithmetic is implemented. For that reason, we find the technique based on simulated inductances (not to mention the transformers frequently needed in LC synthesis) and the Gm-C technique not convenient for synthesis of higher order filters.

State variable filters are found to be very simple to synthesize provided the transfer function is given in a form of quotient of polynomials using summation notation. Analysis made in [14], however, claims that the gain-bandwidth product of the op-amps and the bandwidth of the OTAs must be much larger than the desired frequency of operation to ensure stability. For that reason, we find the state-variable solution not feasible for higher order filters.

IV. Parallel Synthesis of Active Filters

In this section a procedure will be proposed for synthesis of active RC circuits in a form of parallel network. After proper transformation of the transfer function into partial fractions, choice of cells realizing the cell-functions of the fractions will be offered and procedures of calculating element values will be given.

A. Decomposition of the Transfer Function

The continuous time transfer function may be represented in a form of sum of partial fractions as follows [2],

$$H_a(s) = A_0 \cdot H(s) = A_0 \cdot \frac{\prod_{i=1}^{m}(s-z_i)}{\prod_{i=1}^{n}(s-p_i)} =$$

$$A_0 \cdot \sum_{i=1}^{n} \frac{r_i}{(s-p_i)} = \begin{cases} \sum_{i=1}^{n/2} H_e(s), n-\text{even} \\ H_o(s) + \sum_{i=1}^{\lfloor n/2 \rfloor} H_e(s), n-\text{odd.} \end{cases} \quad (2a)$$

Note (2a) is valid for $n>m$ only. Index e is used to denote a second order fraction constructed by a complex pair of poles while o denotes a first order fraction constructed by a simple real pole. Complex residue in the pole p_i is denoted with r_i. We will denote $p_i=\sigma_i+j\cdot\omega_i$, $z_i=\alpha_i+j\cdot\beta_i$ and $r_i=\mu_i+j\cdot\xi_i$.

In the case $n=m$ polynomial long division must be carried out first (as explained in [7]) which leads to,

$$H_a(s) = A_0 \cdot [1 + H(s)]. \quad (2b)$$

The structure of the summing circuit is depicted in Fig. 1.

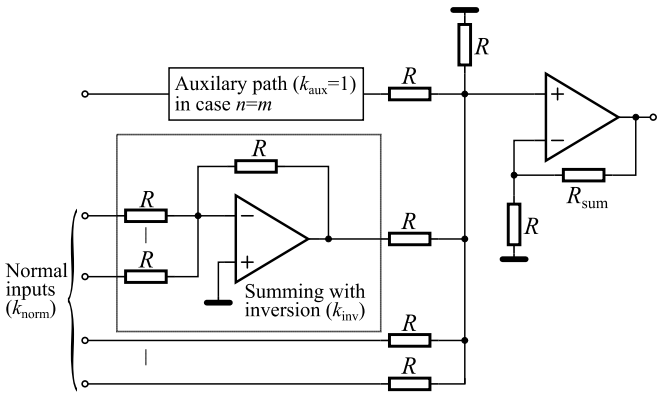

Fig. 1. Realization of the summing subsystem

As can be seen an auxiliary unity gain path is allowed for filters having n=m.

The summands in (2a) are given by

$$H_e(s) = G_i \frac{s + b_{0,i}}{s^2 + a_{1,i}s + a_{0,i}} \quad (3a)$$

with

$$G_i = 2 \cdot A_0 \cdot \alpha_i, \quad (3b)$$

$$b_{0,i} = \begin{cases} -\left(\alpha_i + \frac{\mu_i \cdot \alpha_i}{\mu_i}\right), \xi_i \cdot \omega_i > 0 \\ \left(\frac{\xi_i \cdot \omega_i}{\mu_i} - \alpha_i\right), \xi_i \cdot \omega_i < 0 \end{cases}, \quad (3c)$$

$$a_{1,i} = -2\,\text{re}\{p_i\},\ a_{i0} = |p_i|^2,\ H_o(s) = G_o \frac{1}{s + a_o}, \quad (3d)$$

with $G_o = A_0 \cdot r_o$, and $a_o = -p_o$. In the above "re" stands for "real part" while "im" for "imaginary part".

The residues needed for the realization of the above computations are obtained (for the case of simple poles) as follows,

$$r_i = \lim_{s \to p_i} \left\{\left[(s-p_i)\cdot H(s)\right]\right\} = \left[(s-p_i)\cdot H(s)\right]_{|s=p_i} \quad (4)$$

Accordingly (3a) and (3f) may be rewritten as.

$$H_e(s) = \frac{G_i \cdot s + G_i \cdot b_{0,i}}{s^2 + a_{1,i}s + a_{0,i}} \quad (5a)$$

with

$$G_i = 2 \cdot A_0 \cdot \mu_i, \quad (5b)$$

$$G_i \cdot b_{0,i} = \begin{cases} -2 \cdot A_0 \cdot (\mu_i\sigma_i + \xi_i \cdot \omega_i), \xi_i \cdot \omega_i > 0 \\ 2 \cdot A_0 \cdot (\xi_i \cdot \omega_i - \sigma_i \cdot \mu_i), \xi_i \cdot \omega_i < 0 \end{cases}, \quad (5c)$$

$$a_{1,i} = -2 \cdot \sigma_i,\ a_{i0} = |p_i|^2 = \sigma_i^2 + \omega_i^2 \quad (5d)$$

and

$$H_o(s) = G_o \frac{1}{s + a_o} \quad (5e)$$

with $G_o = A_0 \cdot r_o = A_0 \cdot \mu_0$ and $a_o = -p_o = -\sigma_0$.

The developments expressed so far are (apart of the notation) equal to the ones used in [7]. The difference and, accordingly, the novelty we are introducing, is in the use of standard and universally accepted circuits (cells) which are realizing (5a) and (5e) in the place of “multiple entry” cells used in [7]. Since two types of cell transfer functions are in view, only two types of circuit cells will be involved. Note that the second order cell has one zero at infinity and another on the real axis of the frequency plane being not restricted to any part of the real axis.

B. Second order cell design

According to the literature there are several concepts for creation of second order cells mainly intended to be used in cascade synthesis of active RC filters. The specifics of parallel synthesis may be seen from (5a) which represent a second order cell with a zero at the real axis of the complex frequency plane.

There were several cells already proposed at the time that are qualified for implementation in a case of transfer function containing a zero at the real axis. For the sake of brevity, we will discuss only the one known as Tow-Thomas (TT) (Fig.2) [10] biquad having low sensitivities to parasitics.

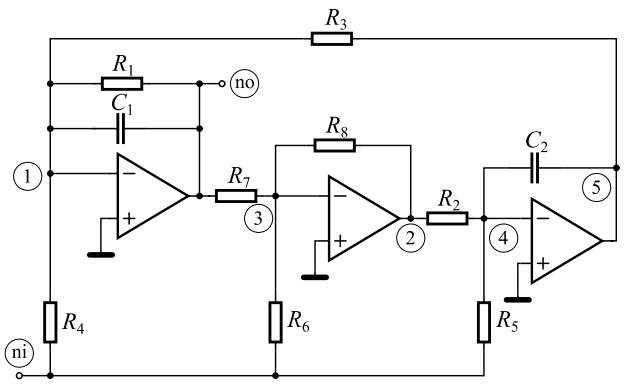

Fig. 2. Tow-Thomas second order filter cell.

To get the design equations we first simplify the notation. On may find easily by analogy that (5a), for a given cell, may be rewritten as

$$H_e(s) = g\frac{s+q}{s^2+as+b} \tag{6a}$$

Now, after circuit analysis one gets

$$\{a,b\} = \{1/(C_1R_1), R_8/(R_2R_3R_7C_1C_1)\}, \tag{6b}$$

$$\{q,g\} = \left\{\frac{R_4(R_5R_8 - R_2R_6)}{R_2R_3R_5R_6C_2}, -1/(C_1R_4)\right\}. \tag{6c}$$

To get the element values we firstly adopt C_1=C_2=C. Then, we adopt R_2=R_3=R_7=R. With that set, one may calculate

$$\{R_1, R_4, R_8\} = \{1/(aC), 1/(|g|C), bC^2R^3\} \tag{7a}$$

and for

$$\{R_5, R_6\} = \{R, R_8/[R(qRC/R_4 + 1/R_5)]\}, \text{for } q > 0, \tag{7b}$$

$$\{R_5, R_6\} = \{1/[R_8/(R\cdot R_6) - qRC/R_4], R\}, \text{for } q < 0, \tag{7c}$$

$$\{R_5, R_6\} = \{R, R_5R_8/R_2\}, \text{for } q = 0. \tag{7d}$$

Note, in the above case (g<0) both left and right half-plane zeros at the real axis are possible i.e. q>0 and q<0 is allowed. To keep this property, when the gain is positive we introduce inverters for every such cell.

C. First Order Cell

The first order cell is a simple inverter-integrator circuit as depicted in Fig. 3.

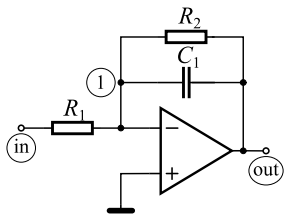

Fig. 3. Inverting-integrator first order filter cell.

To accommodate to the sign of the first order fraction we suggest using an additional inverter.

The transfer function may be expressed in the form

$$H_o = g/(s+a) \tag{8a}$$

where by analogy we have

$$C_1 = C,\ R_1 = 1/(|g|C_1),\ R_2 = 1/(aC_1). \tag{8b}$$

Of course, the value of C_1, it may be chosen to be equal to the capacitances used within the TT cells.

V. A Case Study

The example used for comparisons will be a wideband 16th order band-pass filter with central frequency at 10kHz and with relative bandwidth of 65%. We used an 8th order selective LSM low-pass filter having its group delay corrected by transmission zeros in the right-half plane [11] as a prototype. The final version was obtained after low-pass to band-pass transformation. The poles and zeros of the filter to be synthesized are given in Table I.

Two filters were created one as parallel and another as cascade using the $\mathcal{RM}$ software for filter design [16]. The parallel version used 8 TT cells while the cascade used 6 TT cells, one high-pass high Q, and one low-pass high-Q cell [3]. Table II depicts a comparison in number of circuit elements used. As expected the parallel solution needs

more resistors and operational amplifiers while less capacitors.

As can be seen from Table III the parallel solution will be realized with a span of the resistors more than three times smaller than in the cascade case, which may be decisive when integrated resistors are used. In addition, in the parallel solution all capacitances may be equal. That makes the parallel solution extremely convenient for programmable filters [17].

TABLE I
ZEROS AND POLES OF THE EXAMPLE TRANSFER FUNCTION

Zeros	Poles
$\pm j1.5219870$	$-0.036474871732 \pm j1.360312888830$
$\pm j0.6570359$	$-0.019697178268 \pm j0.734596838828$
$\pm j1.7125020$	$-0.119413574934 \pm j1.302119716210$
$\pm j0.5839408$	$-0.069841675066 \pm j0.761573566207$
$0.1659470 \pm j0.8802626$	$-0.171449892048 \pm j1.164512716530$
$0.2068132 \pm j1.0970360$	$-0.123747207952 \pm j0.840509116528$
	$-0.173697990673 \pm j1.053741406880$
	$-0.152294259327 \pm j0.923895356878$

TABLE II
ZEROS AND POLES OF THE EXAMPLE TRANSFER FUNCTION

Type	No. Resistors	No. Capacitors	No. Opamps
Cascade	60	19	20
Parallel	64+14	16	26

TABLE III
ZEROS AND POLES OF THE EXAMPLE TRANSFER FUNCTION

Type	$\frac{R_{max}}{R_{min}}$	$\frac{C_{max}}{C_{min}}$	THD^a [%]	v_n^b [V/√Hz]	V_{offset}^a [V]
Cascade	3132	1.39	0.17	0.43	0.3
Parallel	1042	1	0.23	1.17	0.036

[a] V_{out} =1V; [b] f =10kHz

The rest of the comparison will be made based on simulations. The results depicted in Table III are related to the use of the THS4211 opamp, having GBW of 140 MHz implemented with ±10V supply. Its gain-bandwidth product is advertised to be 140MHz. Its model was downloaded from [18].

Against expectations the parallel solution exhibits slightly larger distortions even though the "measurement' took place at relatively small amplitude of the output signal. Opposite stands for the offset at the output, the one produced by the cascade solution being significant. This happened despite the fact that the last cell in the cascade is a high-pass filters as advised. The noise performance is according expectations.

Finally, the amplitude characteristics (as depicted in Fig. 4) will be discussed. Three traces are shown: one for the case when infinite gain operational amplifiers were used (named ideal); one for the parallel; and one for the cascade solution. As for the passband, as can be seen from Fig. 4a, the cascade solution exhibits serious deterioration of the passband characteristic. We believe that this is a consequence of inadequacy of one or more cells from the point of view of the value of the Q of the critical pole.

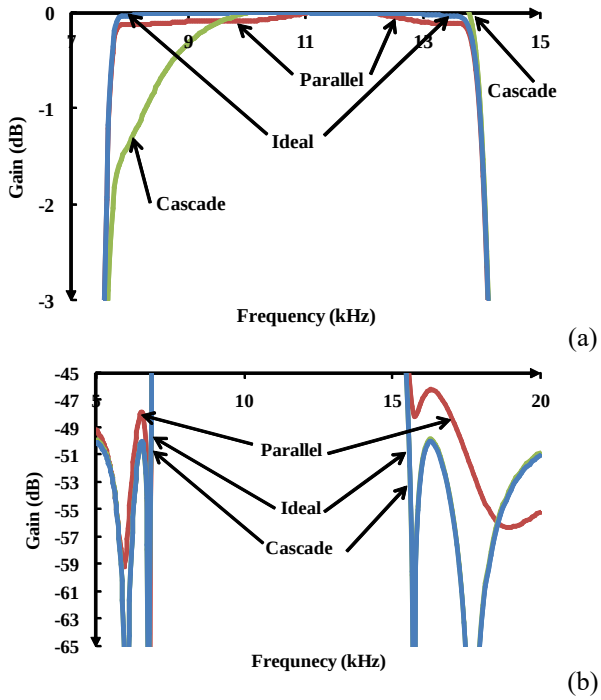

Fig. 4. The amplitude characteristics of the solutions using infinite gain amplifiers (ideal) and parallel and cascade solutions using the THS4211 operational amplifier.

Either the threshold (between high and low Q) was wrongly set or one needs a cell which may be stated as one with medium Q.

On the other side, Fig. 6b claims that the stopband response of the parallel solution is highly distorted. We think that this is a consequence of the smaller value of the gain of the op-amps than needed which makes the small numbers manipulated in the summing (and subtracting) amplifier slightly erroneous which in turn gives rise to the arithmetic error Better amplifier and passive components with small tolerances would be needed to overcome this disadvantage.

To verify the claims related to the value of the gain of the opamps we repeated both designs with a new opamp. We used LTC6268-10 having gain-bandwidth 4GHz. Its Spice model was taken from [19]. The new simulation results are depicted in Fig. 5. The responses of the cascade and the parallel solutions almost overlap. That means that better operational amplifiers are needed for both schematics.

While in the case of the parallel solution we think that the "arithmetic" was improved, for the case of the cascade solution we think that the larger value of the gain improves the pole Q sensitivity so making the choice of high- or low-Q cell less important.

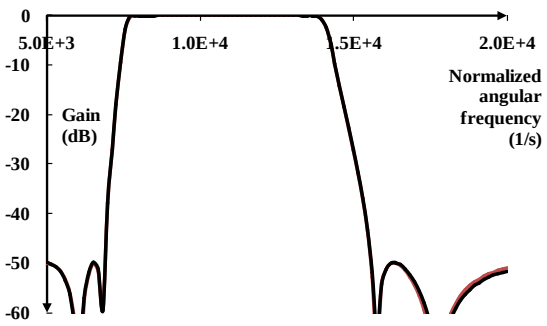

Fig. 5. The amplitude characteristics of the solutions using parallel and cascade solutions using the LTC6268-10 operational amplifier.

VI. Conclusion

In these proceedings we tried to draw the attention of the filter design community to an alternative to the most frequently used cascade synthesis. Special attention was paid to higher order filters which are encountered when selective band-pass and band-stop solutions are sought. We showed that the parallel implementation is, apart from the price, equally feasible (if not preferable) as the cascade. Its main advantage is related to the design algorithm which is straightforward and easy to program. In addition, it is always convenient for design of programmable filters since all capacitors may have the same value. Finally, significantly lower spread of the resistor values was observed in the case of parallel solution which may lead to significant savings in the occupied chip area.

Acknowledgement

This work was partially funded by Serbian Ministry of Education, Science and Technological Development under contract No. TR32004.

References

[1] P. A. Mohan, VLSI Analog Filters: Active RC, OTA-C, and SC. Springer Science & Business Media, 2013.

[2] A. B. Williams and F. J. Taylor, Electronic filter design handbook, 2006, no. Sirsi) i9780071471718.

[3] R. P. Sallen and E. L. Key, "A practical method of designing rc active filters," IRE Transactions on Circuit Theory, vol. 2, no. 1, pp. 74–85, 1955.

[4] P. Fleischer and J. Tow, "Design formulas for biquad active filters using three operational amplifiers," proceedings of the IEEE, vol. 61, no. 5, pp. 662–663, 1973.

[5] S. Pandit, S. Kar, C. Mandal, and A. Patra, "High level synthesis of higher order continuous time state variable filters with minimum sensitivity and hardware count," in Proceedings of the conference on Design, automation and test in Europe: Proceedings. European Design and Automation Association, 2006, pp. 1–2.

[6] M. Tan and R. Schaumann, "Simulating general-parameter lc-ladder filters for monolithic realizations with only transconductance elements and grounded capacitors," IEEE Transactions on circuits and systems, vol. 36, no. 2, pp. 299–307, 1989.

[7] P. Moran, "A low-cost parallel implementation for active filters," IEEE Journal on Electronic Circuits and Systems, vol. 2, no. 1, pp. 21–25, 1978.

[8] I. Sahawaneh, A. Sakla, and E. El-Masry, "Comparison between cascade and parallel switched capacitor structures," in Circuits and Systems, 1989., Proceedings of the 32nd Midwest Symposium on. IEEE, 1989, pp. 973–976.

[9] C.-F. Chiou and R. Schaumann, "Refined procedure for optimizing signal-to-noise ratio in cascade active-rc filters," in IEE Proceedings G-Electronic Circuits and Systems, vol. 128, no. 4. IET, 1981, pp. 189–191

[10] T.-Y. Lo and C.-C. F. Hung, 1V CMOS Gm-C filters: design and applications. Springer Science & Business Media, 2009.

[11] V. Litovski, "Synthesis of monotonic passband sharp cutoff filters with constant group delay response," IEEE Transactions on Circuits and Systems, vol. 26, no. 8, pp. 597–602, 1979.

[12] B. Rakovich and V. Litovski, "Least-squares monotonic lowpass filters with sharp cutoff," Electronics Letters, vol. 9, no. 4, pp. 75–76, 1973.

[13] J. Scanlan and J. Rhodes, "Unified theory of cascade synthesis," in Proceedings of the Institution of Electrical Engineers, vol. 117, no. 4. IET, 1970, pp. 665–670.

[14] T. Bakken and J. Choma, "Stability of a continuous-time state variable filter with op-amp and ota-c integrators," in VLSI, 1998. Proceedings of the 8th Great Lakes Symposium on. IEEE, 1998, pp. 77–82.

[15] J. Friend, C. Harris, and D. Hilberman, "Star: An active biquadratic filter section," IEEE Transactions on Circuits and Systems, vol. 22, no. 2, pp. 115–121, 1975.

[16] V. Litovski. (2018) The rm software for filter design (a set of ten presentations). YouTube video. Accessed Sep. 03, 2018. [Online]. Available: https://www.youtube.com/watch?v=QLxfq_kqR_E

[17] M. Banu and Y. Tsividis, "An elliptic continuous-time cmos filter with on-chip automatic tuning," IEEE Journal of Solid-State Circuits, vol. 20, no. 6, pp. 1114–1121, Dec 1985.

[18] Texas instruments (ti). [Online]. Available: http://www.ti.com/product/THS4211/toolssoftware

[19] Analog devices (ad). [Online]. Available: http://www.analog.com/en/design-center